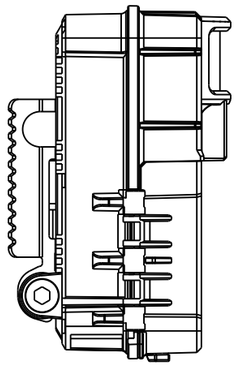

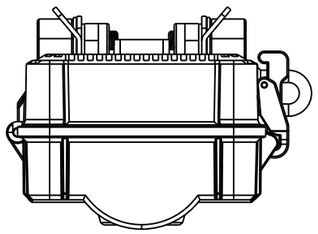

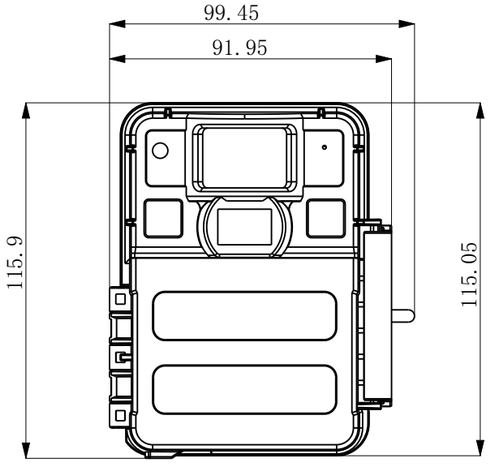
99.45
91.95
115.9
115.05

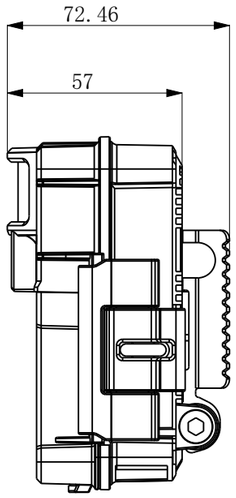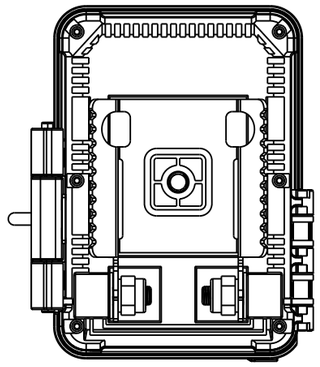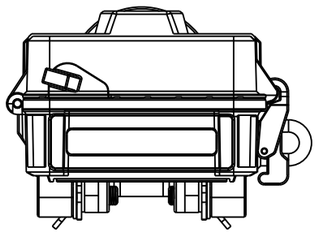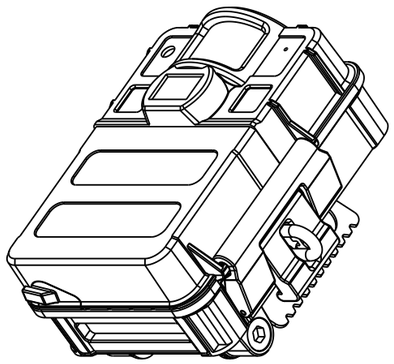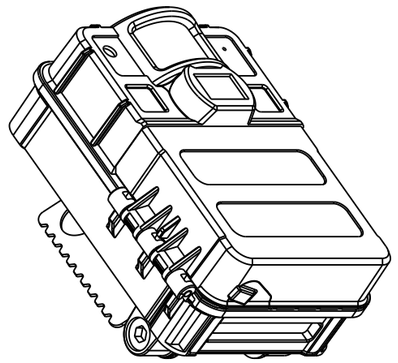
72.46
57